A wireless charging transmitting SoC that supports Qi2.x standards

1 Description

The CV90367 is a wireless power transmitter controller that integrates all required functions for the WPC “Qi” compliant wireless power transmitter design.which supports various adapters such as PD2.0, PD3.0, QC2.0, QC3.0, AFC and so on.Compliance with the latest WPC Qi1.2.x, Qi1.3.x,Qi2.x standards, to support BPP 5W, Apple 7.5W, Samsung PPDE 10W, EPP 15W and MPP15W profiles.

The CV90367 has Integrated over voltage protection, over current protection, over temperature protection and other functions, and supports FOD detection.

The CV90367 is a QFN48 package, and integrates full bridge drive circuit and voltage & current communication decoding function module, which can significantly reduce PCB size and BOM cost.

2 Typical Applications

☆ High power wireless charging base
☆ Android fast charging pads
☆ Tablets
☆ Mobile power wireless charging equipment

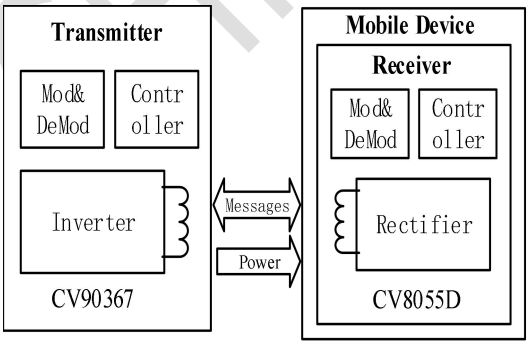

3 Features

- WPC 1.2.4 ,Qi1.3.x, Qi2.x compatible
- Power transfer up to 50W +in proprietary mode and 15W at receiver side in EPP mode
- 32kB Multiple-time programmable (MTP) non-volatile memory for expanded feature support
- support 2 equipment wireless charging at the same time
- Integrated drivers for external power MOSFETs
- Real-time foreign object detection (FOD)
- Over voltage 、 over temperature and over current protection
- Supports I2C interface
- Integrated voltage and current sense amplifier
- LED for system status indication
- Operating temperature: -40℃ up to 85℃

4 Product Information

Orderable Part Number	Package Type	Package Size
CV90367	QFN48	6.00＊6.00＊0.75 mm

1 Pin Assignments

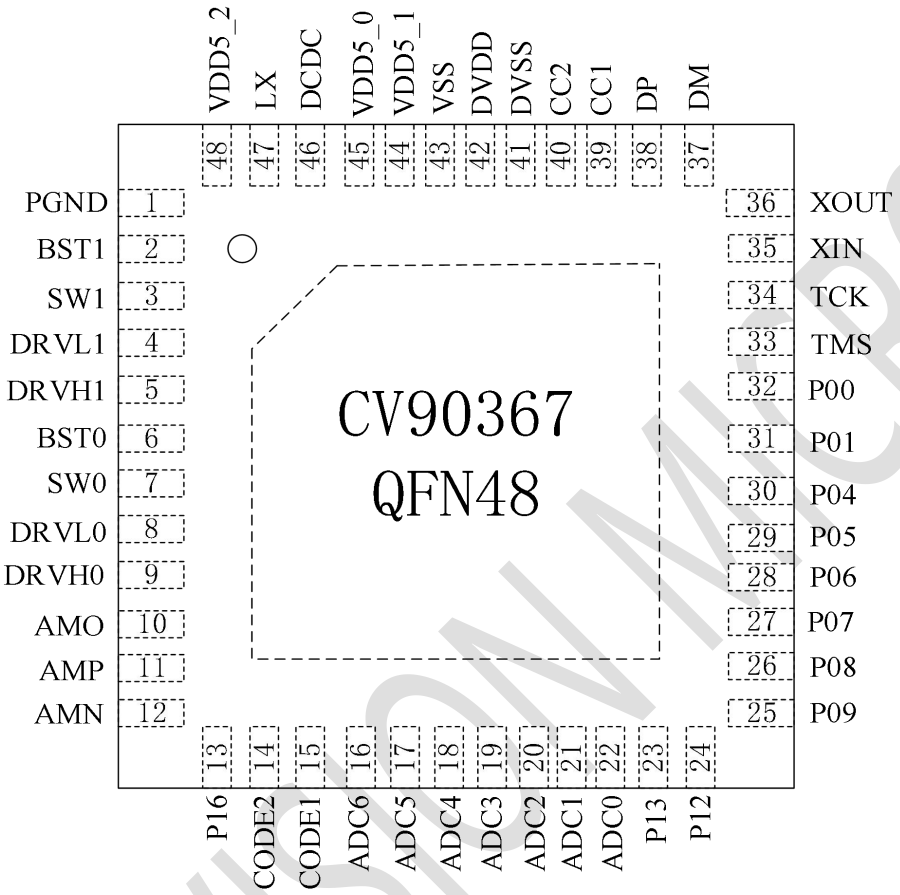

2 Pin Descriptions

Pin Number	Name	Description
1	PGND	Power Ground
2	BST1	MOSFET Half-Bridge Driver 1 High-side bootstrap supply
3	SW1	MOSFET Half-Bridge Driver 1 High-side source connection.
4	DRVL1	MOSET Half-Bridge Driver 1 Low-Side output
5	DRVH1	MOSET Half-Bridge Driver 1 High-Side output
6	BST0	MOSFET Half-Bridge Driver 0 High-side bootstrap supply
7	SW0	MOSFET Half-Bridge Driver 0 High-side source connection.
8	DRVL0	MOSET Half-Bridge Driver 0 Low-Side output
9	DRVH0	MOSET Half-Bridge Driver 0 High-Side output

CHIPSVISION MICRO

Pin Number	Name	Description
10	AMO	Op-amp output terminal
11	AMP	Op-amp postive input terminal
12	AMN	Op-amp nagtive input terminal
13	P16	General-purpose digital I/O pin I2C SDA ADC
14	CODE2	Current sensing demodulation input
15	CODE1	Voltage sensing demodulation input
16	ADC6	ADC input channel 6
17	ADC5	ADC input channel 5
18	ADC4	ADC input channel 4
19	ADC3	ADC input channel 3
20	ADC2	ADC input channel 2
21	ADC1	ADC input channel 1
22	ADC0	ADC input channel 0
23	P13	General-purpose digital I/O pin
24	P12	General-purpose digital I/O pin
25	P09	General-purpose digital I/O pin
26	P08	General-purpose digital I/O pin
27	P07	General-purpose digital I/O pin
28	P06	General-purpose digital I/O pin
29	P05	General-purpose digital I/O pin
30	P04	General-purpose digital I/O pin
31	P01	General-purpose digital I/O pin
32	P00	General-purpose digital I/O pin
33	TMS	Emulation port data pin
34	TCK	Emulation port clock pin
35	XIN	External crystal input pin
36	XOUT	External crystal output pin

CHIPSVISION MICRO

Pin Number	Name	Description
37	DM	USB D- interface
38	DP	USB D+ interface
39	CC1	Type-C CC1 detection pin
40	CC2	Type-C CC2 detection pin
41	DVSS	Ground
42	DVDD	VDD1.8V
43	VSS	Ground
44	VDD5_1	power supply
45	VDD5_0	power supply
46	DCDC	VIN power input
47	LX	DCDC output pin, connected to 6.8uH inductor
48	VDD5_2	power supply

2 Absolute Maximum Ratings

Parameter	Symbol/Pins	Minimum	Maximum	Units
Voltage range	SW0，SW1	-0.3	14	V
	BST0，BST1	-0.3	36	V
	DRVL0，DRVL1	-0.3	6	V
	DRVH0，DRVH1	-0.3	36	V
	DVDD	-0.3	2	V
	PGND，DVSS,VSS	-0.3	0.3	V
	Other Pin	-0.3	6	V
Junction temperature	TJ		125	℃
Storage temperature	Tstg	-40	150	℃
Thermal resistance (junction temperature to environment)	θJA	47		℃/W
Human Body Model	ESD	-2000	2000	V

CHIPSVISION MICRO

3 Recommended Operating Conditions

Parameter	Symbol/Pins	Minimum	Typical	Maximum	Units
Supply Voltage	VIN	5.5		25	V
Input voltage	VDD	0	5	5.5	V
	DVDD	0	1.8	2	V
I/O voltage	CC1, CC2	0	5	5.5	V
	AMPIN,AMPIP,AMPOT, DP,DM	0	5	5.5	V
	P00－P06,P10－P17	0	5	5.5	V
	ADC0－ADC4，CODE1,CODE2	0	5	5.5	V
	AVDD,nRST,XIN, XOUT,MDAT,MCLK	0	5	5.5	V
Standby power consumption	Istandby		10		mA
Operating temperature	TA	-40		85	℃

4 Functional Description

The CV90367 is a highly integrated wireless charge transmission solution chip.It conforms to the latest version of QI protocols of WPC V1.2.x,Qi1.3.x,Qi2.x and supports various adapters such as PD2.0, PD3.0, QC2.0, QC3.0, AFC and so on. In proprietary mode, it can also transmit up to 50 watts of power.

4.1 GPIO Application

The CV90367 has multiple GPIO ports, where P16 is an analog digital hybrid PAD that can be configured for GPIO or ADC input.

4.2 User Defined

The CV90367 can be configured with GPIO to inform the end user of the charging status of a variety of options:

- Use GPIO and built-in timer to control the buzzer. When the power transmission circuit is connected, the buzzer will make a sound.
- Control the LED, telling the user that different events define other states.
- Support custom lighting display.

CHIPSVISION MICRO

4.3 Under Voltage, Over Voltage And Over Current Protection

The CV90367 integrates under voltage, over voltage and over current protection.The thresholds for under voltage, over voltage, and over current can be edited.These thresholds are designed to protect the wireless transmitter/receiver from voltages or currents that can cause system damage or unexpected behavior.In launcher applications, under voltage/over voltage protection is monitored in real time by ADC;Over current protection detects current through RSENSE resistor. When under voltage, over voltage or over current trigger the set threshold during operation, the chip will stop energy transmission, and the LED will give corresponding abnormal indication.When the under-voltage, over-voltage and over-current are restored to a reasonable range, the wireless transmitter will automatically return to the normal working state.

4.4 Temperature Protection

The CV90367 integrates temperature overload protection to prevent damage due to overheating in fault conditions.If the chip temperature exceeds the thermal shutdown threshold, the circuit will shut down or the device will reset.To allow the maximum possible load current and prevent thermal overload, all available pins must be soldered to the PCB to ensure that the heat generated by the CV90367 solution is radiated to the PCB.GND pins (especially the E-Pad) and external bridge FETs should be solder to the PCB ground or power layer, connected to all layers of the PCB through multiple through holes to improve thermal performance.For the QFN package, the exposed pads (hot pads) are soldered onto the PCB and multiple through holes are evenly distributed under the package and led out from the bottom of the PCB.

4.5 Wireless Charging System Description

A wireless power charging system has a base station with one or more transmitters that transmit power to a receiver in a mobile device through a strongly coupled inductor.The WPC transmitter can be of free position or magnetic boot type.The free-positioning type of transmitter has coils that provide the end user with limited spatial freedom to align the receiver with the transmitter.

The power transmitted to the mobile device is controlled by a receiver.The receiver sends communication packets to the sender to increase power, reduce power, or maintain power levels.Communication is entirely digital, with communications 1 and 0 located on a power link between the two coils.

One feature of wireless charging systems is that when they're not charging the mobile device, the sender is in a very low-power sleep mode.The sender maintains this low-power mode and pings periodically until the

sender detects the presence of a receiver.Only after a valid receiver is detected does the transmitter enter the negotiation phase of the operation and begin power transmission.

5 Typical Applications Schematic

Please refer to page 8 of this article for a typical schematic.

6 Ordering Information

The package outline is shown on the last page of this article.

Orderable Part Number	Package	MSL Rating	Shipping Packaging	Minimum packaging quantity
CV90367	QFN48 （6.00 * 6.00 * 0.75 mm）	MSL3	Reel	3000 pcs

CHIPSVISION MICRO

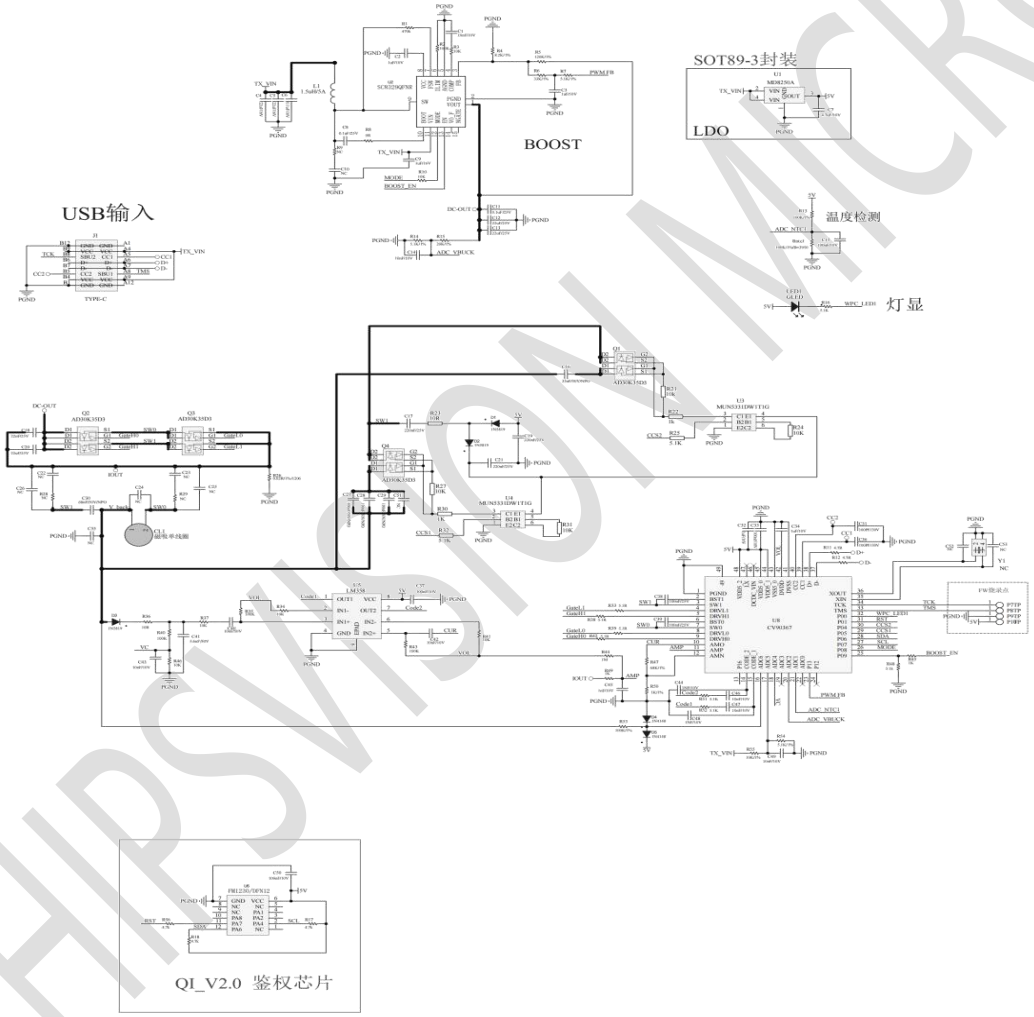

CHIPSVISION MICRO

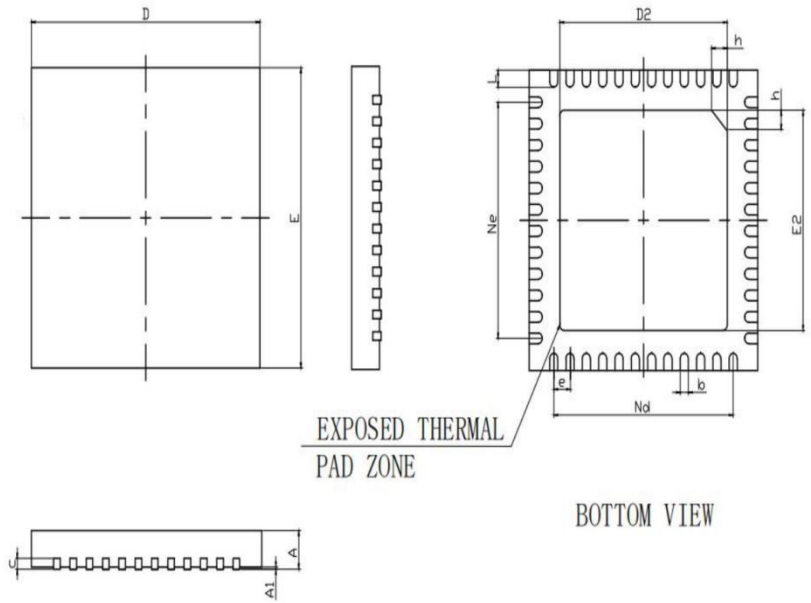

SYMBOL	MILLIMETER		
	MIN	NOM	MAX
A	0.70	0.75	0.80
A1	0	0.02	0.05
b	0.15	0.20	0.25
c	0.18	0.20	0.23
D	5.90	6.00	6.10
D2	4.3REF		
e	0.40BSC		
Ne	4.40BSC		
Nd	4.40BSC		
E	5.90	6.00	6.10
E2	4.3REF		
L	0.35	0.40	0.45
h	0.35REF		

深圳劲芯微电子有限公司 SHENZHEN CHIPSVISION MICRO CO.,LTO.			TITLE: QFN48(6*6*0.75-0.40) PACKAGE OUTLINE DIVENSION	
DWG NO: JXW-POD-001			File: QFN48	Unit: mm
	Name	Date	劲芯微电子 CHIPSVISION MICRO	Edition: A0
Draw	张春林	2020/11/10		
Approved	周喜云	2020/11/10		