承 認 書

SPECIFICATION FOR APPROVAL

● 客戶名称 ● Customer	
● 客戶品號 ● Customer Part No.	
● 产品品號 ● Brightek Part No.	HC-24LU01R31BJD-AA-L
● 产品規格描述 ● Specification	2mm 塔形红光雾状
● 製錶人 ● Prepared By	王清
● 審 核 ● Checkedy	李东平
● 客 戶 回 簽 ● Customer Comfirmation	
● 送样日期: ● Deliver date:	

說明：一、謹致執事者：茲提供敝公司產品之有關詳細規格及圖面資料，敬請給予辦理測試認定手續。
同時敬請 送返一份附有貴公司簽認之測試認定後之樣品認定書。
We are sending you our specification and drawings for your approval. Please return to us one copy "For Approval" with your approved signatures.
二、客戶意見欄 Customer' S Proposal
☐ Approve 承認 (請於認可欄中簽名)
☐ Disagree 不同意
Reason 原因:

光宇集团
中高端光电元件定制企业，20 多年封装经验，品质稳定，值得信赖，体现光的价值。
光宇集团国际（香港）有限公司
GTY Group International (HK) Co., Limited
广东光宇半导体科技有限公司
工厂地址：东莞市寮步镇松湖智谷 A2 栋 3 楼
东莞市弘呈光电有限公司
DongGuan Hong cheng Optoelectronics Co.,Ltd.
工厂地址：广东省东莞市樟木头镇莞樟路樟木头段 15 号 15 栋 2108 号
ADD:Room 2108,No.1 building, Wanhui Garden, East Guanzhang Road, Zhangmutou, Dongguan, Guangdong, China
TEL：0769-87797616 87182291 Fax：0769-82337396 www.hc-led168.com
业务联系人：李顺阳 13925714318 （微信同号）销售总监 企业邮箱：sales@led-hc.com

ISO 14001 环境管理体系认证
ISO 9001 环境管理体系认证
RoHS

版本/版次	修改日期	修改内容

1. overview

* Low power consumption
* Low power
* General equipment on the PCB board or panel
* with IC Supporting the use/Low current requirement

2. Product appearance size figure

（unit：mm）

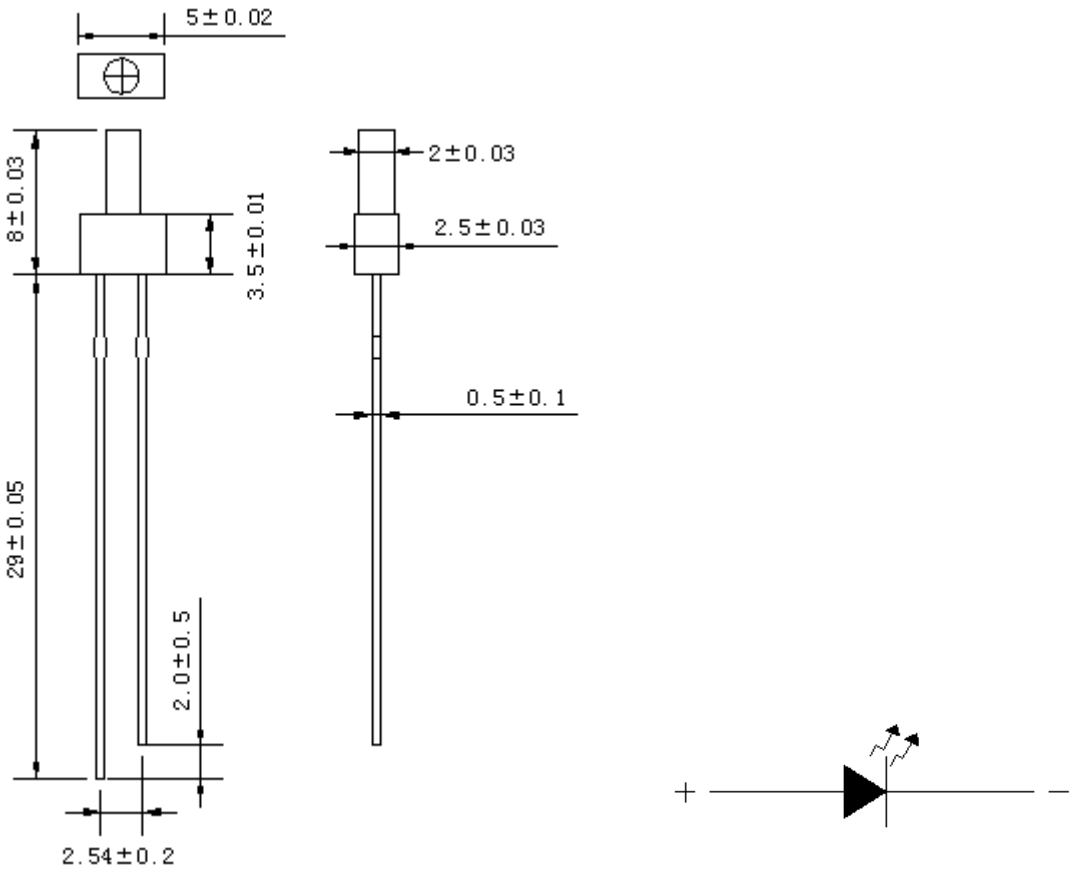

Note：

1：All dimensions are in millimeters (inches).

2：Tolerance is ±0.25mm unless otherwise noted.

3: Specifications are subject to change without notices.

4：This specification is for reference only for one year

3. parameter

3.1 The limit parameter（room temperature 25℃）

parameter	The numerical	Unit
Dissipation power	72	mW
Pulse current （1/10 work loops 0.1 millisecond pulse width ）	100	mA
Working current （IF）	20	mA
Reverse voltage （VR）	5	V
Experiment temperature range	-20℃ ~ +80℃	
Storage temperature range	-20℃ ~ +80℃	
Soldering temperature from the roots (4.0 mm)	260℃ for 5 Seconds	

Photoelectric parameters At room temperature 25℃

Parameter	min	Avg	max	Unit	Test Condition
Luminous intensity	50	———	100	mcd	If=20mA
Light Angle(2 θ 1/2)	———	———	———	deg	If=20mA
The wavelength(λ)	620	———	630	Nm	If=20mA
electric voltage	1. 8	———	2. 4	V	If=20mA
Reverse current		———	1	μA	Vr=5V

Selection Guide

Colloid color	**Chip**		
Color diffusion	Material	**Emitting light colors**	λp (nm)
	GaASP/GaP	Red	630

4、Under the condition of 25 ℃ electrical diagram:

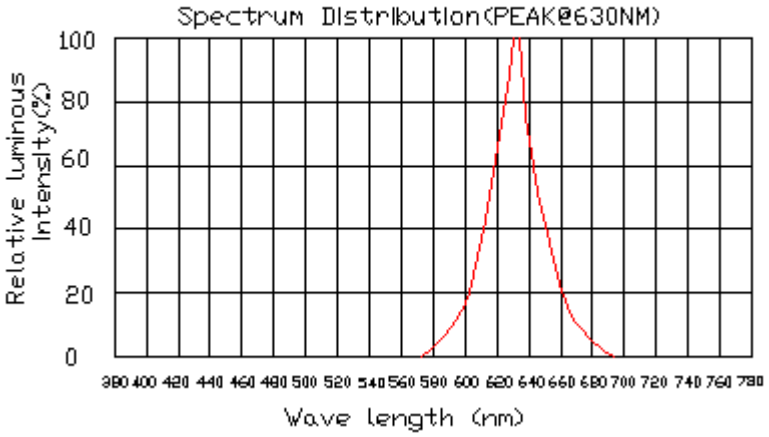

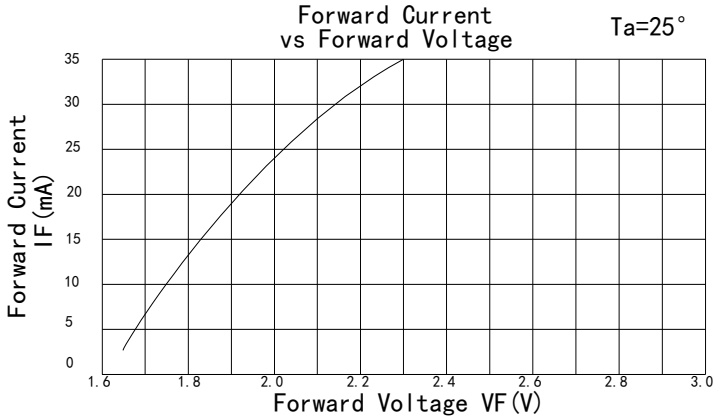

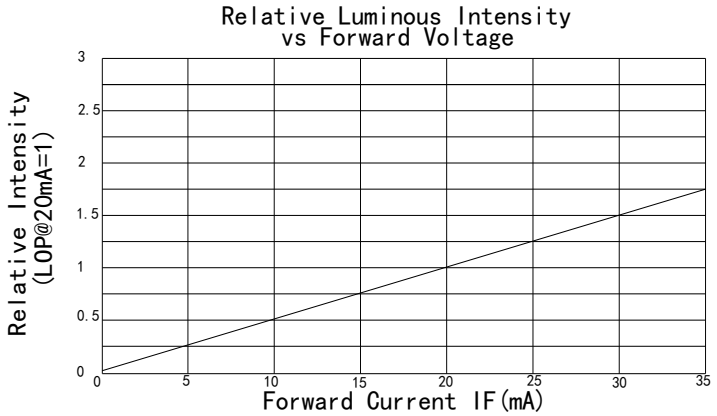

5. Not dry glue label

P/N: Product number

VF: Forward voltage

BIN: points light

IV: Luminous intensity

WL: Color/wavelength

QTY: number

QC: Production order

6. packaging

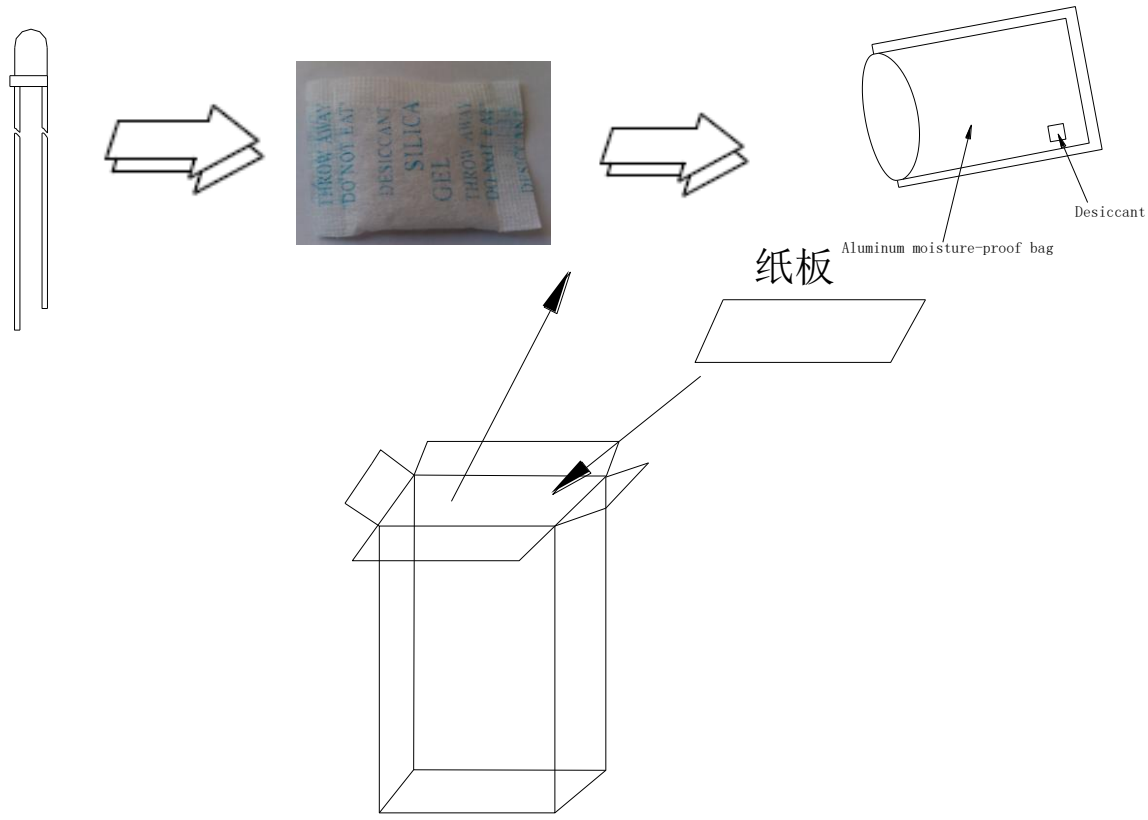

The packing way：Electrostatic bag packing

Packing specification：White light color packing 500 PCS/bag, puguang 500 PCS/bag。

Pay attention to：Above belongs to the normal packing specification, if you have any special requirements according to customer requirements

7. The cautions of stent deformation

Stent deformation must be conducted before welding, plastic, stent bend position must be at least 3 mm at the bottom of the encapsulating resin, at the same time, avoid bent many times on the same position. When the deformation, fixed bracket, please use the right tools to avoid resin pressure. Especially not as a pivot pin connected with the resin part, so the stress within the product on light emitting structure directly into damage, lead to the change of product features and even damaged. For the same reason, in the assembly of products, the distance between welding PCB hole must be in the pin spacing of the products strictly match, as shown in the figure below:

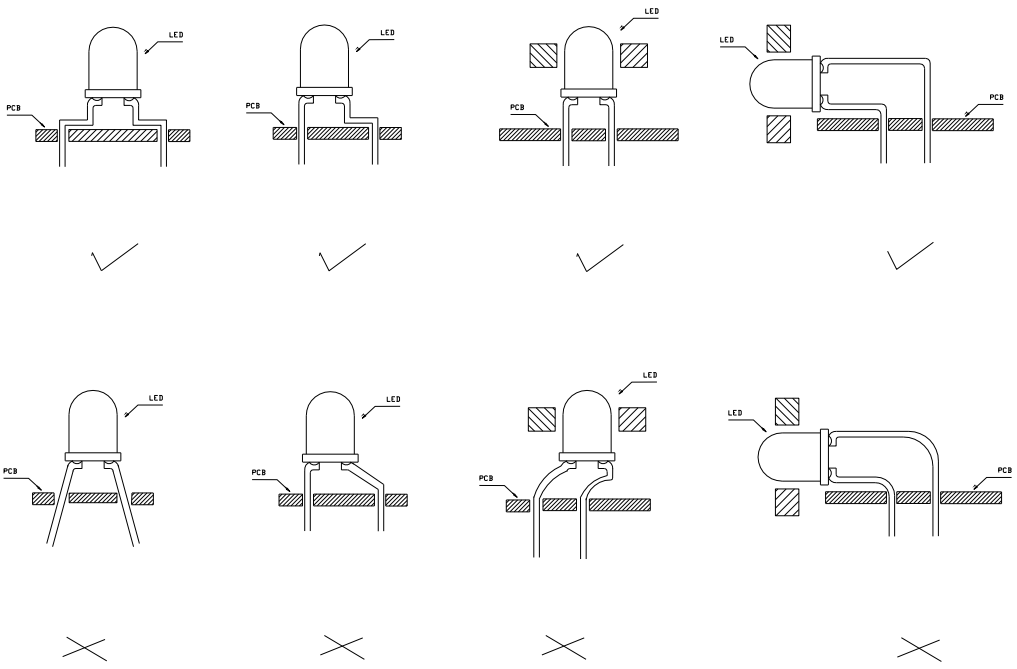

✓ correct mounting methods

✗ Incorrect mounting methods

8. Reliability of the experimental project and conditions

Test Item 测试项目	Ref. Standard 参考标准	Test Conditions 测试条件	Note 备注	Conclusion 结论
Life Test 老化测试	JESD22-A108	Ta=25℃ IF=20mA	1000 hrs	0/100
Temperature Cycle 温度循环	JESD22-A104	-20℃ 30min ↑↓15min 80℃ 30min	200 cycle	0/100
Thermal Shock 冷热冲击	JESD22-A106	-20℃ 15min ↑↓15sec 80℃ 15min	200 cycle	0/100
High Temperature Storage 高温存储	JESD22-A103	Ta=100℃	1000 hrs	0/100
Low Temperature Storage 低温存储	JESD22-A119	Ta=-20℃	1000 hrs	0/100
Power Temperature Cycling 点亮高低温循环	JESD22-A105	On5min-20℃>15min ↑↓ ↑↓<15min Off5min80℃>15min	200 cycle	0/100
High Humidity Heat Life Test 高温高湿	JESD22-A101	60℃ RH=90% IF=20mA	1000 hrs	0/100
Wave soldering 波峰焊	JESD22-B106	260℃ for 3 sec	3 times	0/22

Reliability experiment unqualified judgement standard

IV: Attenuation less than 30%

VF: Change is more than 20%

note：1）Same project the results of the test must be completed within 2 hours。

2）Testing must be completed in each experiment. Material return to normal conditions。

9. ESD protective

LED is a semiconductor device, the static sensitive, especially for white, green, blue, purple LED to make efforts to prevent electrostatic generation and eliminate static electricity。

9.1 The generation of static electricity

a. Friction: in daily life, any two objects of different material contact after the separation, can produce static, and the one of the most common method of generation of static electricity, is the electrification. The insulation material, the better, the easier the electrification. In addition, any two objects of different material contact again after separation, also can produce static electricity。

b. Induction: in view of the conductive material, because electrons can flow freely in its surface, such as to be put in the electric field, due to the same, opposites attract, the positive and negative ions will move, can produce electric charge on the surface。

c. Conduction: in view of the conductive material, because electrons can flow freely in surface, such as contact with a charged object, the charge transfer will occur。

9.2 The dangers of static electricity on the LED:

a. For the moment's electric field or electric current produced by the heat, the LED local injury。

b. Because of destruction of the electric field or current LED insulation layer, the device will not work (destroyed) characterized by death lamp。

9.3 Electrostatic protection and measures to eliminate

For the entire process (production, testing, packaging, etc.) all employees in direct contact with the LED to measures to prevent and eliminate static electricity, mainly:

a. Laying anti-static workshop floor and well grounded。

b. Workbench for ESD workstation, production machines grounding is good。

c. Operators wear anti-static clothing, anti-static hand ring, gloves or foot ring。

d. Application of ion fan, the welding electric grounding measures。

e. Packing with antistatic materials。